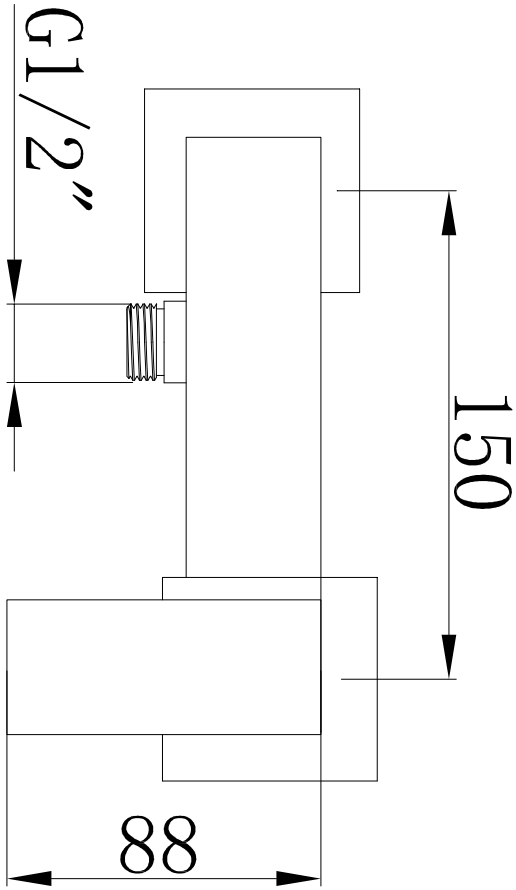
G1/2″
150
88

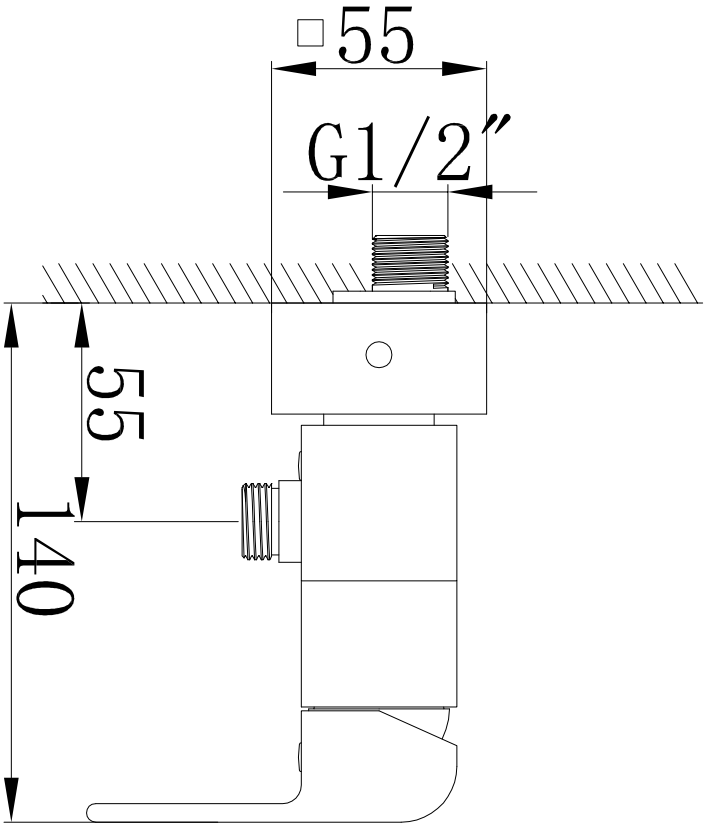
□55
G1/2″
55
140